Revisit Euler Buckling problem

joint with Atia Afroz

Toshizumi Fukui (Saitama University)

15 September 2018, fjv 2018 (Nha Trang)

Buckling of rod (with pinned ends)

Buckling of rod (with pinned ends)

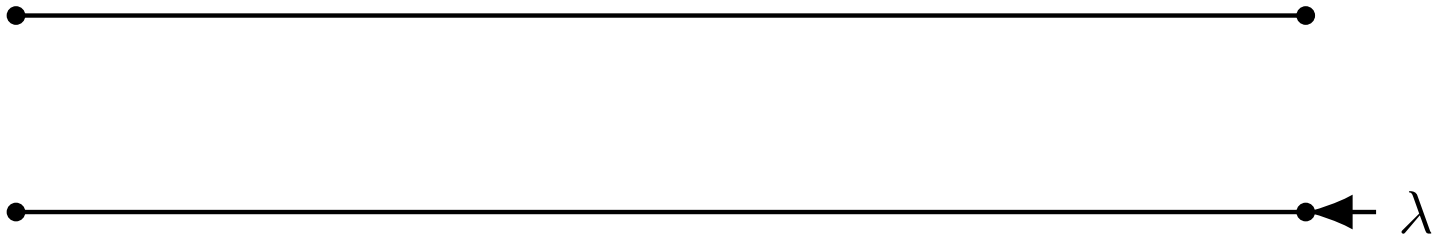

Buckling of rod (with pinned ends)

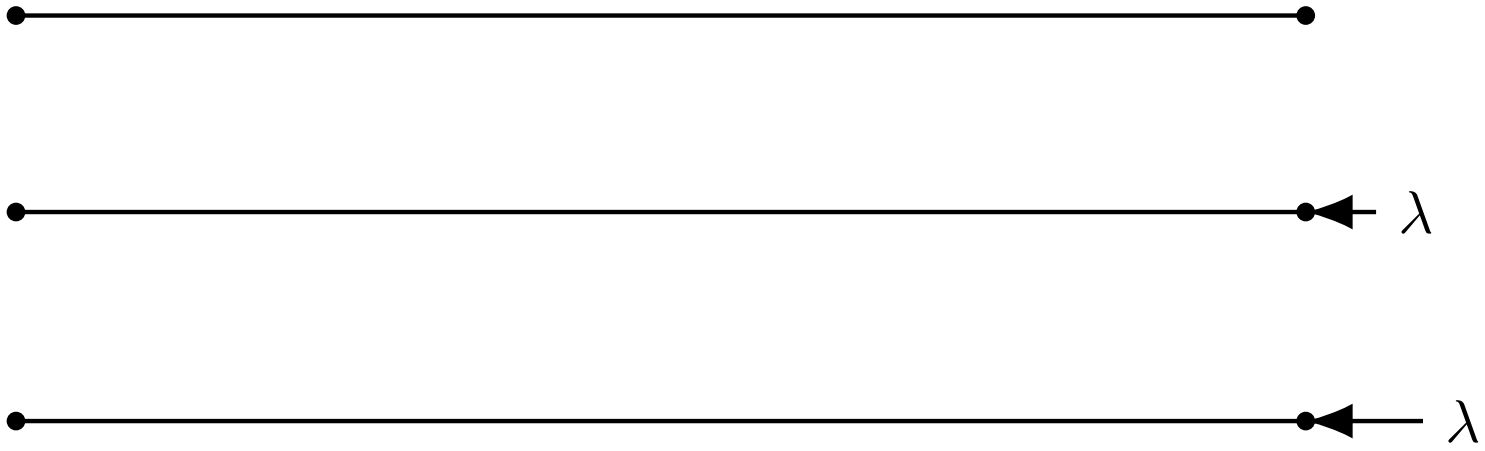

Buckling of rod (with pinned ends)

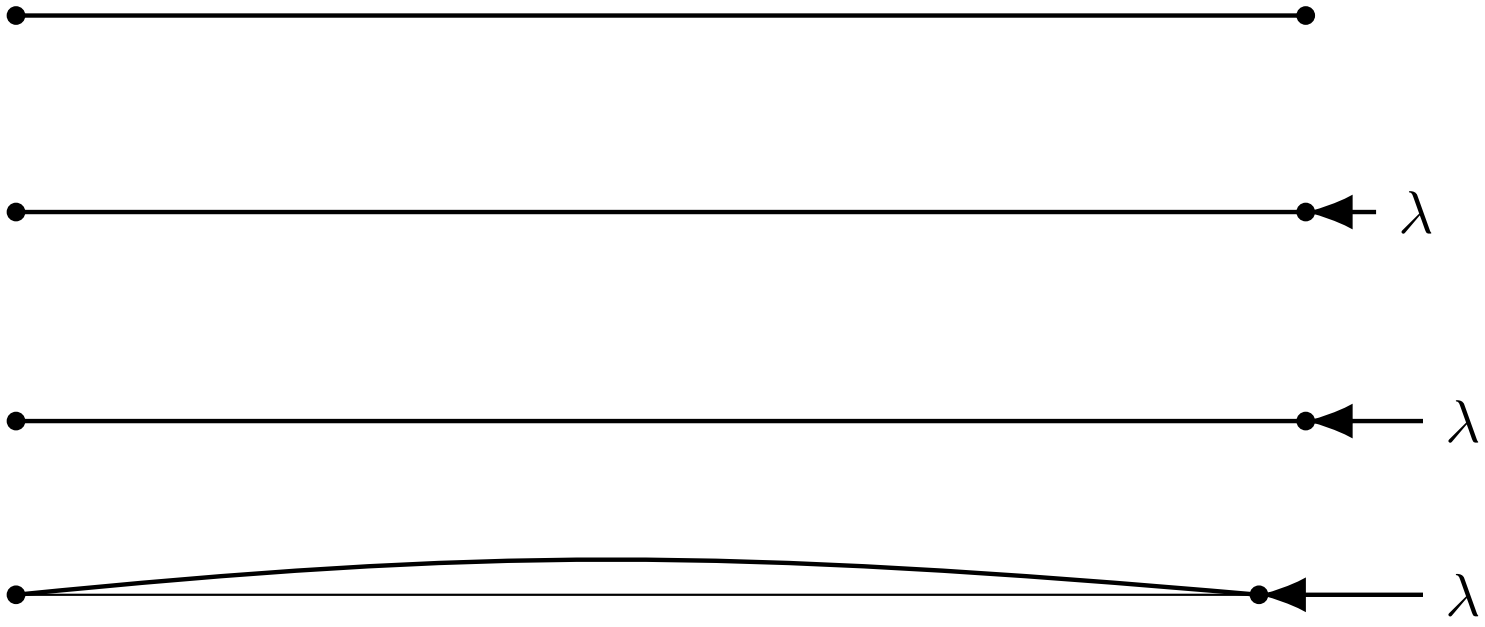

Buckling of rod (with pinned ends)

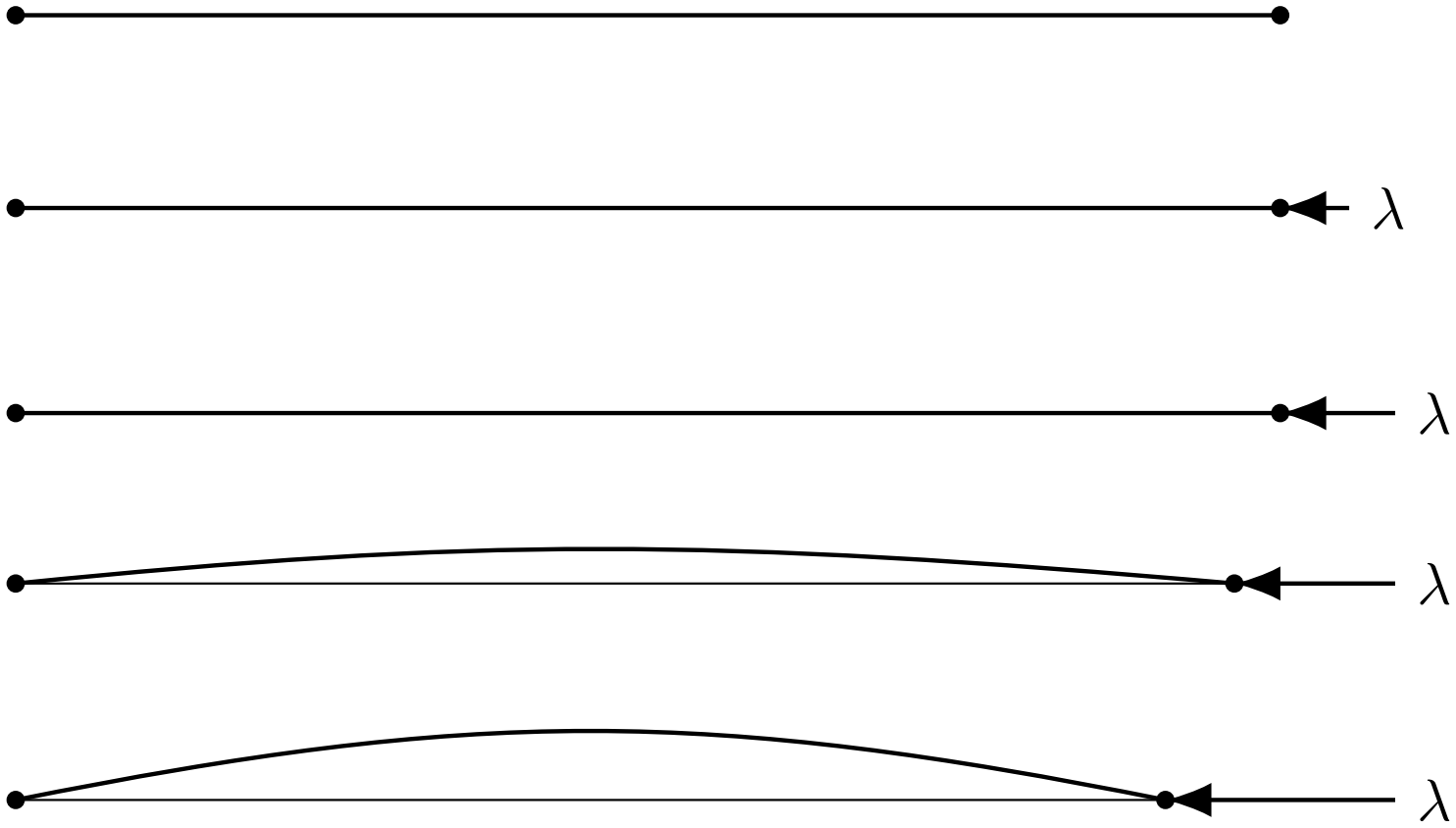

Euler buckling

When $\lambda < \lambda^*$, nothing happens.

Euler buckling

When $\lambda < \lambda^*$, nothing happens.

When $\lambda > \lambda^*$, we have buckling.

Euler buckling

When $\lambda < \lambda^*$, nothing happens.

When $\lambda > \lambda^*$, we have buckling.

where λ^* is Euler's critical load.

Euler buckling

When $\lambda < \lambda^*$, nothing happens.

When $\lambda > \lambda^*$, we have buckling.

where λ^* is Euler's critical load.

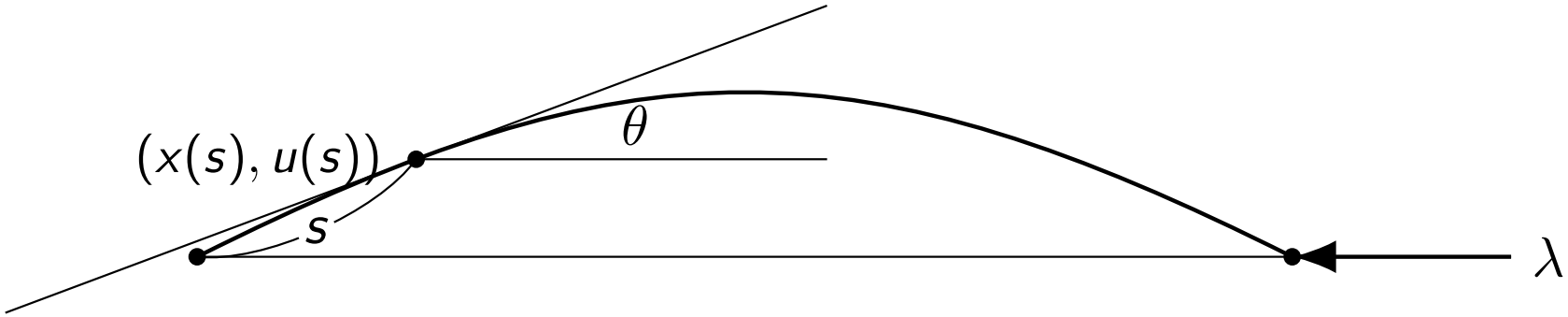

s: arc length parameter

l: the length of the rod

θ: angle

κ: curvature

Energy formulation

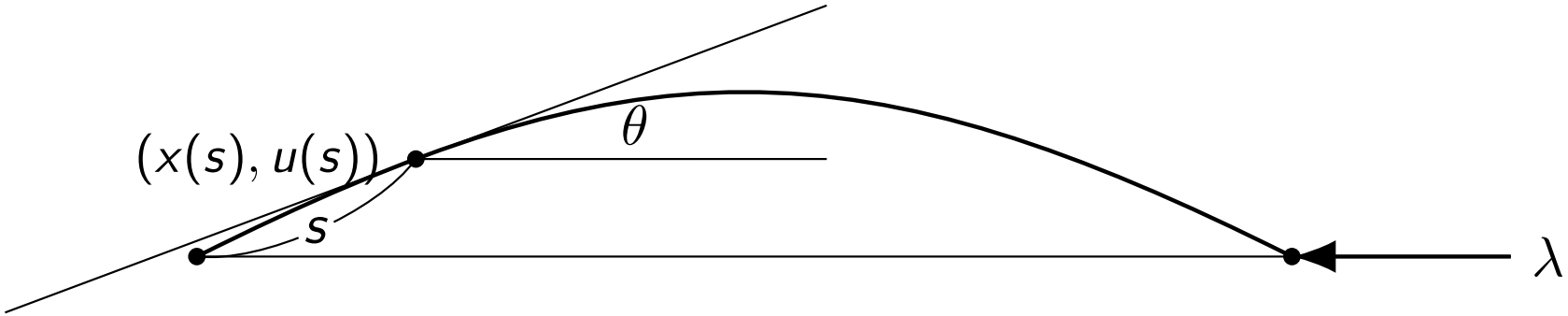

Minimize energy $E = S + \lambda T$ where

$$S = \frac{1}{2}\int_0^l \kappa^2 \, ds \qquad \text{strain energy,}$$

$$T = x(s) \qquad \text{potential energy}$$

Variational problem

- Minimize the energy $E = S + \lambda T$

Variational problem

- Minimize the energy $E = S + \lambda T$
- Investigate zero of

$$X \to X^*, \quad u \mapsto [\phi \mapsto D_\phi E]$$

where X is some Banach space, X^* dual space of X, and

$$(D_\phi E)_u = \lim_{t \to 0} \frac{1}{t}(E|_{u+t\phi} - E|_u)$$

Variational problem

- Minimize the energy $E = S + \lambda T$
- Investigate zero of

$$X \to X^*, \quad u \mapsto [\phi \mapsto D_\phi E]$$

where X is some Banach space, X^* dual space of X, and

$$(D_\phi E)_u = \lim_{t \to 0} \frac{1}{t}(E|_{u+t\phi} - E|_u)$$

- We would like to know the bifurcation of the zero set above.

Let us start compute

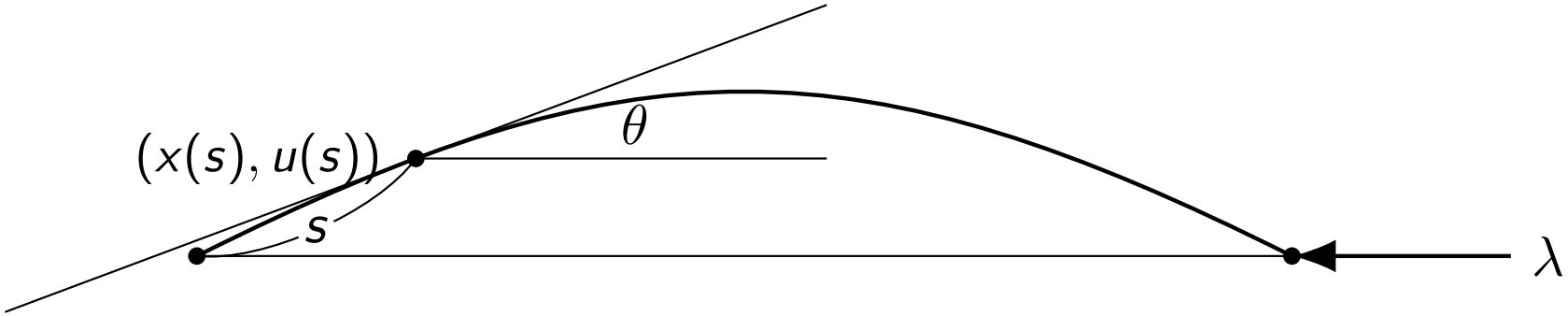

- s: arc length parameter, $x' = \cos\theta$, $u' = \sin\theta$

Let us start compute

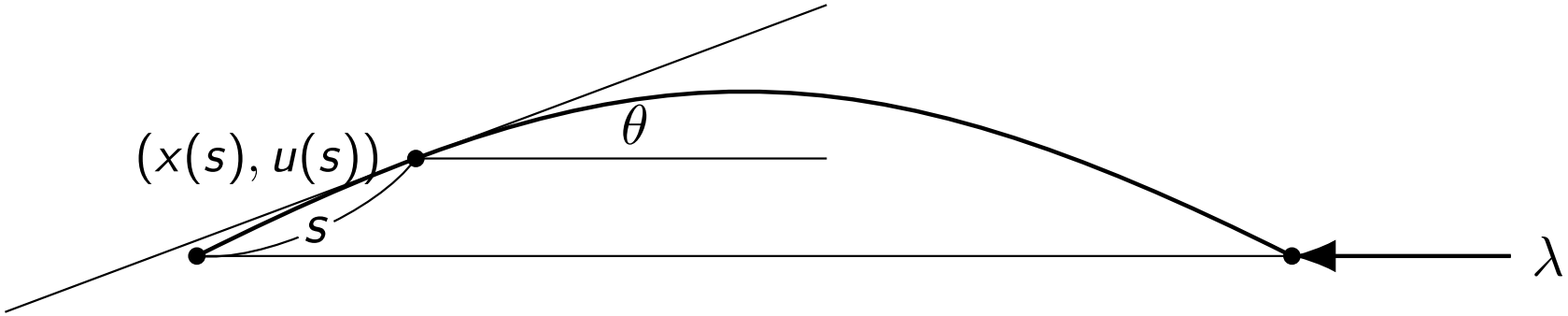

- s: arc length parameter, $x' = \cos\theta$, $u' = \sin\theta$
- κ: curvature

$$\kappa = \frac{d\theta}{ds} = \frac{d}{ds}\sin^{-1} u' = \frac{u''}{(1-(u')^2)^{1/2}}$$

- T: potential energy

$$T = x(s) = \int_0^l x' ds = \int_0^l \cos\theta \, ds = \int_0^l (1-(u')^2)^{1/2} \, ds$$

Variational formulation

- Minimize E

$$E = \frac{1}{2}\int_0^l \frac{u''}{(1-(u')^2)^{1/2}}ds + \lambda\int_0^l (1-(u')^2)^{1/2}ds$$

Variational formulation

- Minimize E

$$E = \frac{1}{2}\int_0^l \frac{u''}{(1-(u')^2)^{1/2}}ds + \lambda\int_0^l (1-(u')^2)^{1/2}ds$$

- on X

$$X = \{u \in H^2[0,l] : u(0) = u(l) = 0\}$$

Variational formulation

- Minimize E

$$E = \frac{1}{2}\int_0^l \frac{u''}{(1-(u')^2)^{1/2}}ds + \lambda \int_0^l (1-(u')^2)^{1/2}ds$$

- on X

$$X = \{u \in H^2[0,l] : u(0) = u(l) = 0\}$$

- where $H^2[0,l]$ is Sobolev space on $[0,l]$

Variational formulation

- Minimize E

$$E = \frac{1}{2}\int_0^l \frac{u''}{(1-(u')^2)^{1/2}}ds + \lambda\int_0^l (1-(u')^2)^{1/2}ds$$

- on X

$$X = \{u \in H^2[0,l] : u(0) = u(l) = 0\}$$

- where $H^2[0,l]$ is Sobolev space on $[0,l]$
- First variation formula:

$$(D_\phi E)_u = \int_0^l \Big[\frac{u''\phi''}{1-(u')^2} + \Big(\frac{u'(u'')^2}{(1-(u')^2)^2} - \frac{\lambda u'}{(1-(u')^2)^{1/2}}\Big)\phi'\Big]ds$$

Variational formulation

- Minimize E

$$E = \frac{1}{2}\int_0^l \frac{u''}{(1-(u')^2)^{1/2}}ds + \lambda\int_0^l (1-(u')^2)^{1/2}ds$$

- on X

$$X = \{u \in H^2[0,l] : u(0) = u(l) = 0\}$$

- where $H^2[0,l]$ is Sobolev space on $[0,l]$
- First variation formula:

$$(D_\phi E)_u = \int_0^l \Big[\frac{u''\phi''}{1-(u')^2} + \Big(\frac{u'(u'')^2}{(1-(u')^2)^2} - \frac{\lambda u'}{(1-(u')^2)^{1/2}}\Big)\phi'\Big]ds$$

- Investigate the bifurcation of zero of

$$\Phi : X \times \mathbb{R} \to X^*, \qquad \Phi(u,\lambda) = [\phi \mapsto (D_\phi E)_u]$$

Sobolev space $W^{k,p}[0,l]$

$$\mathcal{F}[0,l] = \{f : [0,l] \to \mathbb{R}\}/_{\underset{\text{a.e.}}{\sim}}.$$

$f \underset{\text{a.e.}}{\sim} g$ means f and g coincide except measure zero set.

$$W^{k,p}[0,l] = \{u \in \mathcal{F}[0,l] : \|u\|_{k,p} < \infty\}$$

$$\|u\|_{k,p} = \left(\sum_{i=0}^{k} \binom{k}{i} \|D^i u\|_p^2\right)^{\frac{1}{2}}, \quad \text{Sobolev norm}$$

$$\|u\|_p = \begin{cases} \left(\int_0^l |u|^p ds\right)^{1/p}, & 1 \le p < \infty, \\ \sup\{|u(s)| : s \in [0,l]\}, & p = \infty, \end{cases}$$

where $D^i u$ denote the ith order distributional derivatives of u.

$$H^k[0,l] = W^{k,2}[0,l]$$

which is a Hilbert space.

Let us see the bifurcation from trivial solution

- $u = 0$ is a solution

$$\Phi(0, \lambda) = 0$$

Let us see the bifurcation from trivial solution

- $u = 0$ is a solution
$$\Phi(0, \lambda) = 0$$
- Set $u = \sum_{m=1}^{\infty} y_m u_m$, $y_m \in \mathbb{R}$,
$$u_m = \frac{1}{\sqrt{l/2}} \sin \frac{m\pi s}{l}, \quad m = 1, 2, 3, \ldots$$

Let us see the bifurcation from trivial solution

- $u = 0$ is a solution
$$\Phi(0, \lambda) = 0$$
- Set $u = \sum_{m=1}^{\infty} y_m u_m$, $y_m \in \mathbb{R}$,
$$u_m = \frac{1}{\sqrt{l/2}} \sin \frac{m\pi s}{l}, \quad m = 1, 2, 3, \ldots$$
- Consider
$$\Phi(y_1, y_2, \ldots, \lambda) = \Phi(\sum_{m=1}^{\infty} y_m u_m, \lambda)$$

- By computation,

$$\frac{\partial \Phi}{\partial y_m}(0,\lambda) = \left(\frac{\pi^2 m^2}{l^2} - \lambda\right)\frac{\pi^2 m^2}{l^2} u_m^*$$

Setting $\Phi = \Phi_1 u_1^* + \Phi_2 u_2^* + \cdots$,

$$J\Phi = \begin{pmatrix} \frac{\partial \Phi_1}{\partial y_1} & & & \\ & \frac{\partial \Phi_2}{\partial y_2} & & \\ & & \frac{\partial \Phi_3}{\partial y_3} & \\ & & & \ddots \end{pmatrix}$$

- By computation,

$$\frac{\partial \Phi}{\partial y_m}(0,\lambda) = \left(\frac{\pi^2 m^2}{l^2} - \lambda\right)\frac{\pi^2 m^2}{l^2} u_m^*$$

Setting $\Phi = \Phi_1 u_1^* + \Phi_2 u_2^* + \cdots$,

$$J\Phi = \begin{pmatrix} \frac{\partial \Phi_1}{\partial y_1} & & & \\ & \frac{\partial \Phi_2}{\partial y_2} & & \\ & & \frac{\partial \Phi_3}{\partial y_3} & \\ & & & \ddots \end{pmatrix}$$

- Inverse mapping theorem implies that $u = 0$ is only solution near 0 when $\lambda \neq \frac{\pi^2 m^2}{l^2}$

- By computation,

$$\frac{\partial \Phi}{\partial y_m}(0,\lambda) = \left(\frac{\pi^2 m^2}{l^2} - \lambda\right)\frac{\pi^2 m^2}{l^2} u_m^*$$

Setting $\Phi = \Phi_1 u_1^* + \Phi_2 u_2^* + \cdots$,

$$J\Phi = \begin{pmatrix} \frac{\partial \Phi_1}{\partial y_1} & & & \\ & \frac{\partial \Phi_2}{\partial y_2} & & \\ & & \frac{\partial \Phi_3}{\partial y_3} & \\ & & & \ddots \end{pmatrix}$$

- Inverse mapping theorem implies that $u = 0$ is only solution near 0 when $\lambda \neq \frac{\pi^2 m^2}{l^2}$
- When $\lambda = \frac{\pi^2 m^2}{l^2}$, we have pitchfolk bifurcation at $u = 0$.

Lyapunov-Schmidt reduction

- When $\lambda = \lambda^* = \frac{\pi^2 n^2}{l^2}$, the matrix

$$J\Phi = \begin{pmatrix} \frac{\partial \Phi_1}{\partial y_1} & & & \\ & \frac{\partial \Phi_2}{\partial y_2} & & \\ & & \frac{\partial \Phi_3}{\partial y_3} & \\ & & & \ddots \end{pmatrix}$$

  is of corank 1.

Lyapunov-Schmidt reduction

- When $\lambda = \lambda^* = \frac{\pi^2 n^2}{l^2}$, the matrix

$$J\Phi = \begin{pmatrix} \frac{\partial \Phi_1}{\partial y_1} & & & \\ & \frac{\partial \Phi_2}{\partial y_2} & & \\ & & \frac{\partial \Phi_3}{\partial y_3} & \\ & & & \ddots \end{pmatrix}$$

  is of corank 1.
- So $\Phi(y_1, y_2, \ldots, \lambda) = 0$ defines y_m $(m \neq n)$ as functions of y_n and λ by implicit function theorem.

Lyapunov-Schmidt reduction

- When $\lambda = \lambda^* = \frac{\pi^2 n^2}{l^2}$, the matrix

$$J\Phi = \begin{pmatrix} \frac{\partial \Phi_1}{\partial y_1} & & & \\ & \frac{\partial \Phi_2}{\partial y_2} & & \\ & & \frac{\partial \Phi_3}{\partial y_3} & \\ & & & \ddots \end{pmatrix}$$

  is of corank 1.
- So $\Phi(y_1, y_2, \ldots, \lambda) = 0$ defines y_m $(m \neq n)$ as functions of y_n and λ by implicit function theorem.
- Now problem is of finite dimension and we conclude pitchfolk bifurcation at $u = 0$.

Pitchfolk bifurcarion

$$F(x, \lambda) = x^3 - \lambda x = 0$$

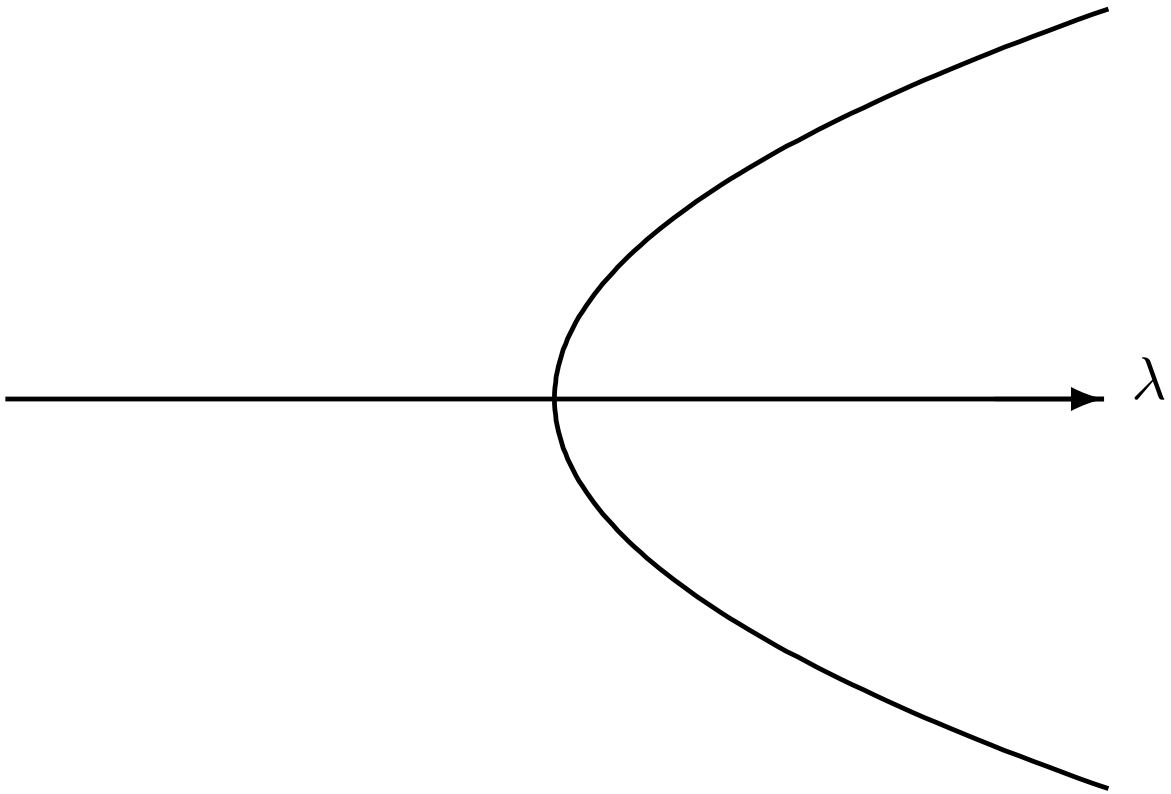

$$F(0,0) = F_x(0,0) = F_{xx}(0,0) = F_\lambda(0,0) = 0,$$
$$F_{xxx}(0,0) \neq 0,\ F_{x\lambda}(0,0) \neq 0$$

Bifurcation set B and hysteresis set H

$$F(x, \lambda, \alpha) = 0$$

$$B = \{\alpha : \exists (x, \lambda)\ F(x, \lambda, \alpha) = 0, F_x(x, \lambda, \alpha) = F_\lambda(x, \lambda, \alpha) = 0\},$$
$$H = \{\alpha : \exists (x, \lambda)\ F(x, \lambda, \alpha) = 0, F_x(x, \lambda, \alpha) = F_{xx}(x, \lambda, \alpha) = 0\}$$

$\alpha \in B$
transcritical
bifurcation

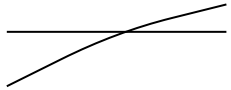

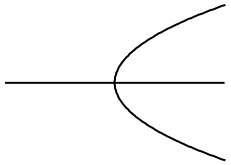

$\alpha \in B$
pitchfolk
bifurcation

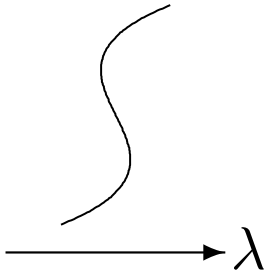

$\alpha \notin H$

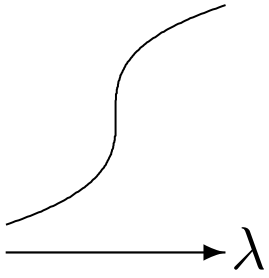

$\alpha \in H$

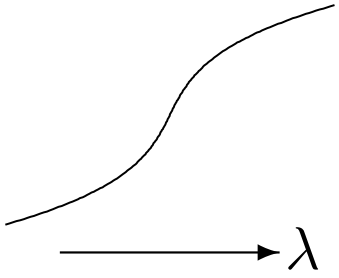

$\alpha \notin H$

Modified problem (due to Golubitsky and Schaefer)

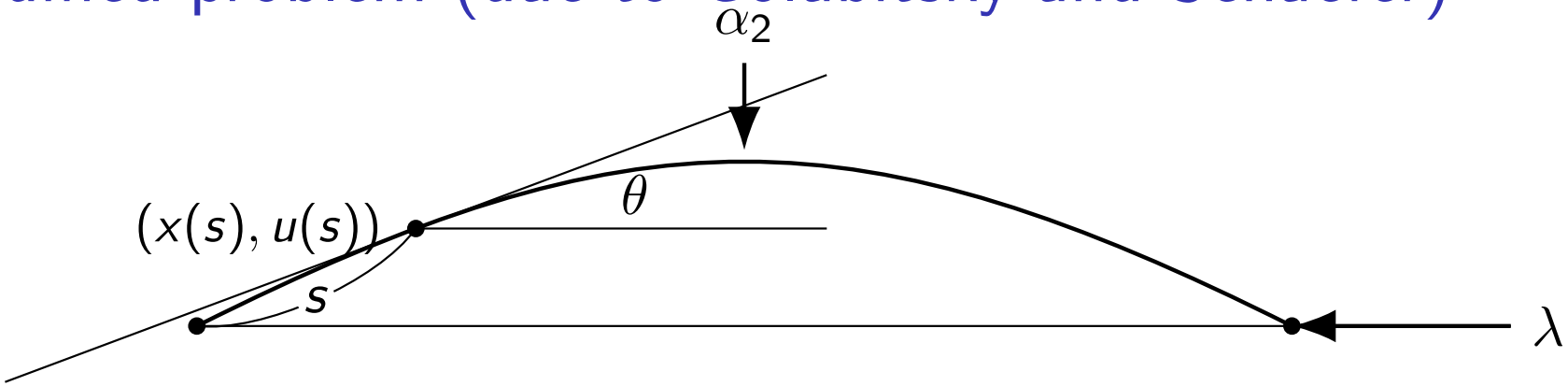

- Minimize $E = S + \lambda T + \alpha_2 u$ where

$$S = \frac{1}{2}\int_0^l (\kappa - \alpha_1)^2 ds$$

Modified problem (due to Golubitsky and Schaefer)

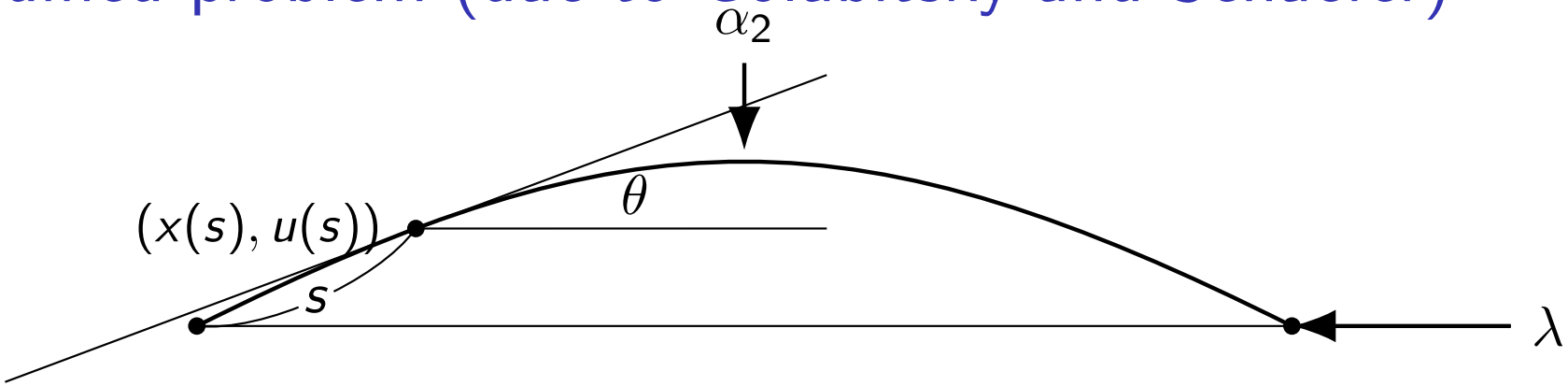

- Minimize $E = S + \lambda T + \alpha_2 u$ where

$$S = \frac{1}{2}\int_0^l (\kappa - \alpha_1)^2 ds$$

- $\Phi(u, \lambda, \alpha_1, \alpha_2) = [\phi \mapsto (D_\phi E)_{(u,\lambda,\alpha)}]$

Modified problem (due to Golubitsky and Schaefer)

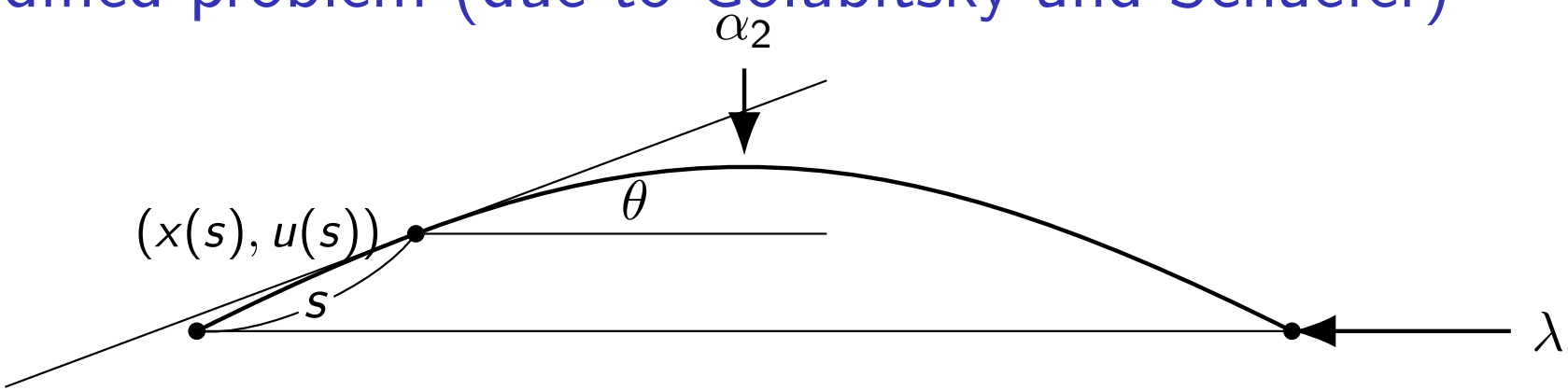

- Minimize $E = S + \lambda T + \alpha_2 u$ where

$$S = \frac{1}{2}\int_0^l (\kappa - \alpha_1)^2 ds$$

- $\Phi(u, \lambda, \alpha_1, \alpha_2) = [\phi \mapsto (D_\phi E)_{(u,\lambda,\alpha)}]$
- Apply Lyapunov-Schmidt reduction, and find W so that

$$\langle \Phi(xu_1 + W(x, \lambda, \alpha)), u_m \rangle = 0, \quad m = 2, 3, \ldots$$

Modified problem (due to Golubitsky and Schaefer)

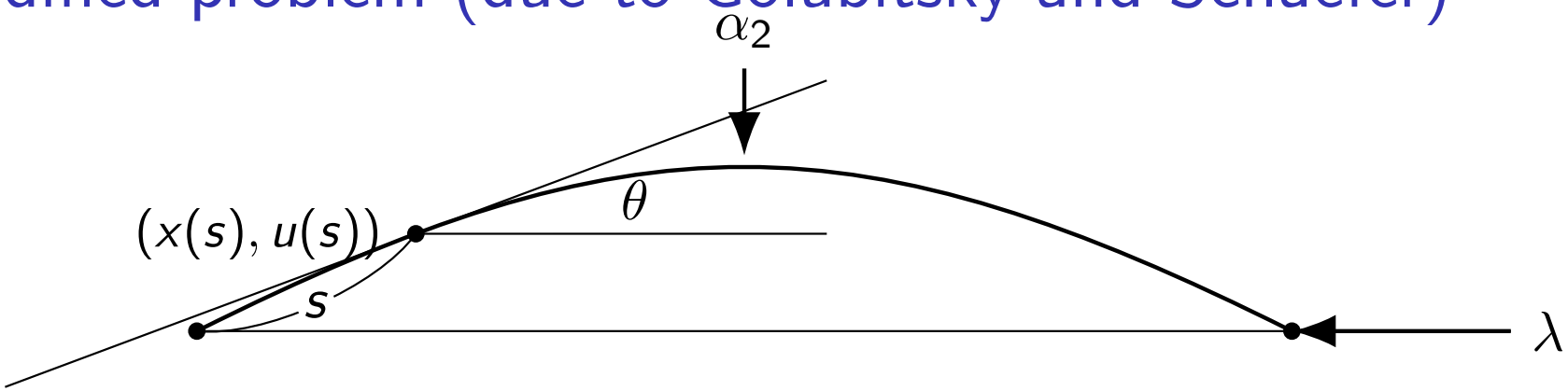

- Minimize $E = S + \lambda T + \alpha_2 u$ where

$$S = \frac{1}{2}\int_0^l (\kappa - \alpha_1)^2 ds$$

- $\Phi(u, \lambda, \alpha_1, \alpha_2) = [\phi \mapsto (D_\phi E)_{(u,\lambda,\alpha)}]$
- Apply Lyapunov-Schmidt reduction, and find W so that

$$\langle \Phi(xu_1 + W(x, \lambda, \alpha)), u_m \rangle = 0, \quad m = 2, 3, \ldots$$

- $F(x, \lambda, \alpha) = \langle \Phi(xu_1 + W, \lambda, \alpha), u_1 \rangle$ is p-$\mathcal{K}$-versal unfolding of pitchfolk bifurcation.

Example of p-$\mathcal{K}$-versal unfolding

$$F(x, \lambda, \alpha_1, \alpha_2) = x^3 - \lambda x + \alpha_1 x^2 + \alpha_2$$

$$B = \{\alpha_2 = 0\}, \qquad H = \{\alpha_1^3 = 27\alpha_2\}$$

The bifurcation diagrams of the zeros of $f_\alpha(x, \lambda) = F(x, \lambda, \alpha)$ are shown as follows:

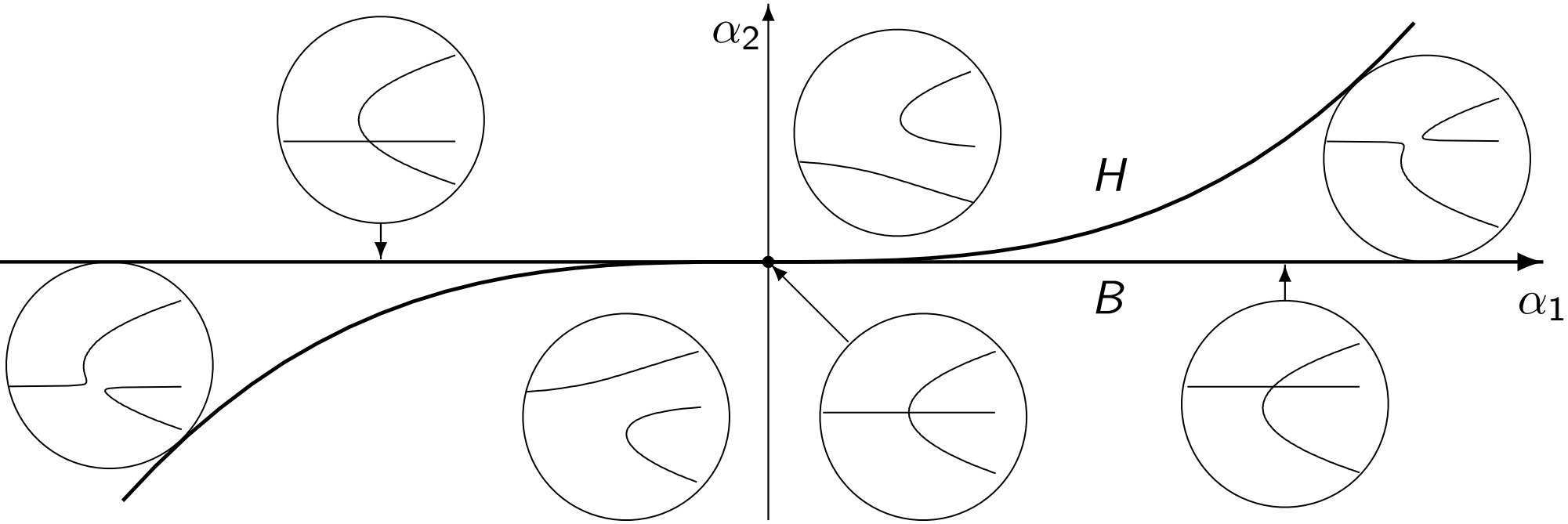

We consider

Minimize $E = S + \lambda T + \alpha_2 u$ on $X = H^2[0.l]$ where

$$S = \frac{1}{2}\int_0^l (\kappa - \alpha_1 \kappa)^2 ds$$

where $\kappa = \frac{1}{\sqrt{l/2}}\left[a_0 + \sum_{i=1}^{\infty} a_i \cos\frac{2i\pi s}{l}\right]$.

We consider

Minimize $E = S + \lambda T + \alpha_2 u$ on $X = H^2[0.l]$ where

$$S = \frac{1}{2}\int_0^l (\kappa - \alpha_1 \kappa)^2 ds$$

where $\kappa = \frac{1}{\sqrt{l/2}}\left[a_0 + \sum_{i=1}^{\infty} a_i \cos\frac{2i\pi s}{l}\right]$.

We obtain that

$$(D_\phi E)_{(u,\lambda,\alpha)} = ((\Psi)_u - \lambda(\Lambda)_u)\cdot\phi - \alpha_1(K)_u\cdot\phi + \alpha_2\phi(\tfrac{l}{2})$$

where

$$(\Psi)_u\cdot\phi = \int_0^l \Big(\frac{u''\phi''}{(1-(u')^2)} + \frac{u'(u'')^2\phi'}{(1-(u')^2)^2}\Big)ds,$$

$$(\Lambda)_u\cdot\phi = \int_0^l \frac{u'\phi'}{(1-(u')^2)^{\frac{1}{2}}}ds,$$

$$(K)_u\cdot\phi = \int_0^l \kappa\Big(\frac{\phi''}{(1-(u')^2)^{1/2}} + \frac{u'u''\phi'}{(1-(u')^2)^{3/2}}\Big)ds.$$

Smoothness

$$\Phi : X \times \mathbb{R} \times \mathbb{R}^2 \to X^*,\ \Phi(u, \lambda, \alpha) = [\phi \mapsto (D_\phi E)_{(u,\lambda,\alpha)}]$$

Smoothness

$\Phi : X \times \mathbb{R} \times \mathbb{R}^2 \to X^*$, $\Phi(u, \lambda, \alpha) = [\phi \mapsto (D_\phi E)_{(u,\lambda,\alpha)}]$

Since we are in the context of variational problem, the smoothness of Φ is not a priori clear.

Smoothness

$\Phi : X \times \mathbb{R} \times \mathbb{R}^2 \to X^*$, $\Phi(u, \lambda, \alpha) = [\phi \mapsto (D_\phi E)_{(u,\lambda,\alpha)}]$

Since we are in the context of variational problem, the smoothness of Φ is not a priori clear.

- Theorem: Φ is smooth

Smoothness

$\Phi : X \times \mathbb{R} \times \mathbb{R}^2 \to X^*$, $\Phi(u, \lambda, \alpha) = [\phi \mapsto (D_\phi E)_{(u,\lambda,\alpha)}]$

Since we are in the context of variational problem, the smoothness of Φ is not a priori clear.

- Theorem: Φ is smooth
- Key: If $j + i_1 + \cdots + i_k \leq k + 2$,

$$\left| \int_0^l A(u')\,(u'')^j v_1^{(i_1)} \cdots v_k^{(i_k)} ds \right| \leq C \|A(u')\|_\infty \|u\|_{2,2}^j \|v_1\|_{2,2} \cdots \|v_k\|_{2,2}.$$

- If $j + i_1 + \cdots + i_k > k + 2$, we need to replace $\|\cdot\|_{2,2}$ by $\|\cdot\|_{3,2}$.

$$F(x,\lambda,\alpha) = \langle \Phi(xu_n + W(x,\lambda,\alpha),\lambda,\alpha), u_n\rangle$$

$$F = \frac{x^3}{6}\bar{F}_{xxx} + \bar{F}_{x\lambda}\lambda x + \bar{F}_1\alpha_1 + \bar{F}_2\alpha_2 + \frac{x^2}{2}\ell(\alpha) + xQ(\alpha) + C(\alpha) + O(4),$$

where

$$\begin{aligned}
\ell(\alpha) &= \bar{F}_{xx1}\alpha_1 + \bar{F}_{xx2}\alpha_2 \\
Q(\alpha) &= \frac{1}{2}(\bar{F}_{x11}\alpha_1^2 + 2\bar{F}_{x12}\alpha_1\alpha_2 + \bar{F}_{x22}\alpha_2^2) \\
C(\alpha) &= \frac{1}{6}(\bar{F}_{111}\alpha_1^3 + 3\bar{F}_{112}\alpha_1^2\alpha_2 + 3\bar{F}_{122}\alpha_1\alpha_2^2 + \bar{F}_{222}\alpha_2^3)
\end{aligned}$$

$$F(x,\lambda,\alpha) = \langle \Phi(xu_n + W(x,\lambda,\alpha),\lambda,\alpha), u_n\rangle$$

$$F = \frac{x^3}{6}\bar{F}_{xxx} + \bar{F}_{x\lambda}\lambda x + \bar{F}_1\alpha_1 + \bar{F}_2\alpha_2 + \frac{x^2}{2}\ell(\alpha) + xQ(\alpha) + C(\alpha) + O(4),$$

where

$$\begin{aligned}
\ell(\alpha) &= \bar{F}_{xx1}\alpha_1 + \bar{F}_{xx2}\alpha_2 \\
Q(\alpha) &= \frac{1}{2}(\bar{F}_{x11}\alpha_1^2 + 2\bar{F}_{x12}\alpha_1\alpha_2 + \bar{F}_{x22}\alpha_2^2) \\
C(\alpha) &= \frac{1}{6}(\bar{F}_{111}\alpha_1^3 + 3\bar{F}_{112}\alpha_1^2\alpha_2 + 3\bar{F}_{122}\alpha_1\alpha_2^2 + \bar{F}_{222}\alpha_2^3)
\end{aligned}$$

where $\bar{F}_{xxx} = F_{xxx}(0,\lambda^*,0)$, $\bar{F}_{x\lambda} = F_{x\lambda}(0,\lambda^*,0)$, $\bar{F}_1 = F_{\alpha_1}(0,\lambda^*,0)$, and so on.

$$F(x,\lambda,\alpha) = \langle \Phi(xu_n + W(x,\lambda,\alpha),\lambda,\alpha), u_n\rangle$$

$$F = \frac{x^3}{6}\bar{F}_{xxx} + \bar{F}_{x\lambda}\lambda x + \bar{F}_1\alpha_1 + \bar{F}_2\alpha_2 + \frac{x^2}{2}\ell(\alpha) + xQ(\alpha) + C(\alpha) + O(4),$$

where

$$\begin{aligned}
\ell(\alpha) &= \bar{F}_{xx1}\alpha_1 + \bar{F}_{xx2}\alpha_2 \\
Q(\alpha) &= \frac{1}{2}(\bar{F}_{x11}\alpha_1^2 + 2\bar{F}_{x12}\alpha_1\alpha_2 + \bar{F}_{x22}\alpha_2^2) \\
C(\alpha) &= \frac{1}{6}(\bar{F}_{111}\alpha_1^3 + 3\bar{F}_{112}\alpha_1^2\alpha_2 + 3\bar{F}_{122}\alpha_1\alpha_2^2 + \bar{F}_{222}\alpha_2^3)
\end{aligned}$$

where $\bar{F}_{xxx} = F_{xxx}(0,\lambda^*,0)$, $\bar{F}_{x\lambda} = F_{x\lambda}(0,\lambda^*,0)$, $\bar{F}_1 = F_{\alpha_1}(0,\lambda^*,0)$, and so on.

$$\bar{F}_1\alpha_1 + \bar{F}_2\alpha_2 = \left(\frac{4\pi n^2}{l^2}\sum_{i=0}^{\infty}\frac{na_i}{n^2-4i^2}\right)\alpha_1 + \left((-1)^{\frac{n-1}{2}}\sqrt{\frac{2}{l}}\right)\alpha_2$$

where $\kappa = \frac{1}{\sqrt{l/2}}\left[a_0 + \sum_{i=1}^{\infty} a_i \cos\frac{2i\pi s}{l}\right]$

Bifurcation of $F(x, \lambda, \alpha) = 0$

- $\lambda^* = n^2\pi^2/l^2$

Bifurcation of $F(x, \lambda, \alpha) = 0$

- $\lambda^* = n^2\pi^2/l^2$
- Theorem: The bifurcation of $F(x, \lambda, 0) = 0$ at $(0, \lambda^*)$ is pitchfolk.

Bifurcation of $F(x, \lambda, \alpha) = 0$

- $\lambda^* = n^2\pi^2/l^2$
- Theorem: The bifurcation of $F(x, \lambda, 0) = 0$ at $(0, \lambda^*)$ is pitchfolk.
- Theorem: If n is odd, $F(x, \lambda, \alpha) = 0$ is p-$\mathcal{K}$-versal unfolding of pitchfolk bifurcation.

Bifurcation of $F(x, \lambda, \alpha) = 0$

- $\lambda^* = n^2\pi^2/l^2$
- Theorem: The bifurcation of $F(x, \lambda, 0) = 0$ at $(0, \lambda^*)$ is pitchfolk.
- Theorem: If n is odd, $F(x, \lambda, \alpha) = 0$ is p-$\mathcal{K}$-versal unfolding of pitchfolk bifurcation.

  Let us compute the 3-jet of F to draw approximate figures of B and H in this case.

B and H up to 3-jet

The bifurcation set B and the hysteresis set H are

$$B = \{\alpha : \bar{F}_1\alpha_1 + \bar{F}_2\alpha_2 + C(\alpha) + O(4)\}$$
$$H = \{\alpha : \bar{F}_1\alpha_1 + \bar{F}_2\alpha_2 + C(\alpha) - \frac{2l^{14}}{27n^{12}\pi^{12}}\ell(\alpha)^3 + O(4)\}$$

Here we have

$$\bar{F}_1\alpha_1 + \bar{F}_2\alpha_2 = \left(\frac{4\pi n^2}{l^2}\sum_{i=0}^{\infty}\frac{na_i}{n^2-4i^2}\right)\alpha_1 + \left((-1)^{\frac{n-1}{2}}\sqrt{\frac{2}{l}}\right)\alpha_2$$

$$C(\alpha) = \frac{1}{6}(\bar{F}_{111}\alpha_1^3 + 3\bar{F}_{112}\alpha_1^2\alpha_2 + 3\bar{F}_{122}\alpha_1\alpha_2^2 + \bar{F}_{222}\alpha_2^3)$$
$$\ell(\alpha) = \bar{F}_{xx1}\alpha_1 + \bar{F}_{xx2}\alpha_2$$

More on $C(\alpha)$

$$\Phi : X \times \mathbb{R} \times \mathbb{R}^2 \to X^*,\ (u, \lambda, \alpha) \mapsto [\phi \mapsto (L)_u \cdot \phi + \alpha_1 (K)_u \cdot \phi + \alpha_2 \delta \cdot \phi]$$

where $(L)_u = (\Psi)_u - \lambda(\Lambda)_u$

$$\begin{aligned}(L)_u \cdot \phi =& L_1[u] \cdot \phi + \frac{1}{6} L_3[u, u, u] \cdot \phi + \cdots \\ =& (\Psi_1 - \lambda \Lambda_1)[u] \cdot \phi + \frac{1}{6}(\Psi_3 - \lambda \Lambda_3)[u, u, u] \cdot \phi + \cdots \\ (K)_u \cdot \phi =& K_0 \cdot \phi + \frac{1}{2} K_2[u, u] \cdot \phi + \cdots\end{aligned}$$

$$C(\alpha) = \left(\frac{1}{6} L_3[u, u, u] - \frac{\alpha_1}{2} K_2[u, u]\right) \cdot u_n \Big|_{u = \bar{W}}, \quad \bar{W} = \bar{W}_1 \alpha_1 + \bar{W}_2 \alpha_2$$

$$\bar{W} = -\frac{l^2}{\pi^2} \sum_{\substack{m:\ \text{odd} \\ m \neq n}} \frac{1}{m^2 - n^2} \left(\frac{4\alpha_1}{\pi} \sum_{i=0}^{\infty} \frac{m a_i}{m^2 - 4i^2} u_m^* + \frac{l^2}{\pi^2} \frac{\alpha_2}{m^2 \sqrt{l/2}} \right) u_m^*$$

Some numerical result

When $n = 1$,

$$L_3[\bar{W}, \bar{W}, \bar{W}] \cdot u_1 = \frac{1}{l\pi}\Big(c_0(\frac{4}{\pi}\alpha_1)^3 + 3c_1(\frac{4}{\pi}\alpha_1)^2\frac{l^2\alpha_2}{\pi^2\sqrt{l/2}} + 3c_2(\frac{4}{\pi}\alpha_1)(\frac{l^2\alpha_2}{\pi^2\sqrt{l/2}})^2 + c_3(\frac{l^2\alpha_2}{\pi^2\sqrt{l/2}})^3\Big)$$

where c_0, c_1, c_2, c_3 are constants.

$$\begin{aligned}
c_0 \simeq & 0.305307a_0^3 + 1.20457a_0^2a_1 + 0.556055a_0^2a_2 + 0.449847a_0^2a_3 + \cdots \\
& + 1.5754a_0a_1^2 + 1.60049a_0a_1a_2 + 1.23451a_0a_1a_3 + \cdots \\
& + 0.0536143a_0a_2^2 + 0.410507a_0a_2a_3 - 0.0983358a_0a_3^2 + \cdots \\
& + 0.683785a_1^3 + 1.15217a_1^2a_2 + 0.821541a_1^2a_3 + \cdots \\
& - 0.121613a_1a_2^2 + 0.763853a_1a_2a_3 - 0.154765a_1a_3^2 + \cdots \\
& + 0.0918374a_2^3 - 0.322925a_2^2a_3 + 0.0171554a_2a_3^2 + 0.0409826a_3^2 + \cdots \\
c_1 \simeq & (0.0560462a_0 + 0.147036a_1 + 0.078606a_2 + 0.0592183a_3 + \cdots)a_0 \\
& + (0.0965134a_1 + 0.112754a_2 + 0.0758876a_3 + \cdots)a_1 \\
& + (0.00853948a_2 + 0.0472655a_3 + \cdots)a_2 - 0.00887054a_3^2 + \cdots \\
c_2 \simeq & 0.0105423a_0 + 0.0141242a_1 + 0.00815088a_2 + 0.00496213a_3 + \cdots, \\
c_3 \simeq & 0.00218564
\end{aligned}$$

For $K_2[\bar{W}, \bar{W}] \cdot u_n,\ n = 1$

Setting $\bar{W} = \bar{W}_1\alpha_1 + \bar{W}_2\alpha_2$, we have

$$K_2[\bar{W}, \bar{W}] \cdot u_n = k_0\alpha_1^2 + 2k_1\alpha_1\alpha_2 + k_2\alpha_2^2$$

$$\begin{aligned}
k_0 = &-\frac{4}{\pi^3 l}\sum_{i,i_1,i_2=0}^{\infty} a_i a_{i_1} a_{i_2}\Big[\frac{(12i_1^2+1)(12i_2^2+1)}{(4i_1^2-1)^2(4i_2^2-1)^2} \\
&+\sum_{\substack{a,b:\mathrm{odd}\\ a,b\neq 1}} \frac{4^2 i}{(a^2-4i_1^2)(b^2-4i_2{}^2)}\,\frac{a^2b^2}{(a^2-1)(b^2-1)}\sum_{\varepsilon_1,\varepsilon_2=\pm 1}\frac{i^2}{(\varepsilon_1 a+\varepsilon_2 b+1)^2-4i^2}\Big], \\
k_1 = &-\frac{16l}{\pi^4}\sqrt{\frac{2}{l}}\sum_{i,i_1=0}^{\infty} a_i a_{i_1}\Big[\frac{12i_1^2+1}{4(4i_1^2-1)^2}\Big(\frac{3}{4}-\log 2\Big) \\
&+\sum_{\substack{a,b:\mathrm{odd}\\ a,b\neq 1}} \frac{1}{a^2-4i_1^2}\,\frac{a^2}{b(a^2-1)(b^2-1)}\sum_{\varepsilon_1,\varepsilon_2=\pm 1}\frac{i^2}{(\varepsilon_1 a+\varepsilon_2 b+1)^2-4i^2}\Big], \\
k_2 = &-\frac{8l^2}{\pi^5}\sum_{i=0}^{\infty} a_i\Big[\Big(\frac{3}{4}-\log 2\Big)^2+\sum_{\substack{a,b:\mathrm{odd}\\ a,b\neq 1}}\frac{1}{ab(a^2-1)(b^2-1)}\sum_{\varepsilon_1,\varepsilon_2=\pm 1}\frac{i^2}{(\varepsilon_1 a+\varepsilon_2 b+1)^2-4i^2}\Big]
\end{aligned}$$

If $a_0 = 1,\ a_i = 0\ (i \geq 1)$, then

$$K_2[\bar{W}, \bar{W}] \cdot u_1 = -\frac{8}{l\pi}\Big(\frac{1}{\pi}\alpha_1 + \frac{3-4\log 2}{4}\frac{l^2}{\pi^2}\sqrt{\frac{2}{l}}\alpha_2\Big)^2.$$

For $\ell(\alpha)$

$$\begin{aligned}\ell(\alpha) =& \bar{F}_{xx1}\alpha_1 + \bar{F}_{xx2}\alpha_2 \\ =& (L_3[u_n, u_n, \bar{W}] - \alpha_1 K_2[u_n, u_n]) \cdot u_n\end{aligned}$$

where $\bar{W} = \bar{W}_1\alpha_1 + \bar{W}_2\alpha_2$.
n is odd

$$\bar{F}_{xx1} = \frac{3n^5\pi^3}{4l^5}\sum_{i=0}^{\infty}\frac{69n^2 - 20i^2}{(9n^2 - 4i^2)(n^2 - 4i^2)}a_i,$$

and

$$\bar{F}_{xx2} = -\frac{3n^2\pi^2}{16l^3}\sqrt{\frac{2}{l}}.$$

Approximations of B and H $(a_0 = 1, a_{i\geq 1} = 0)$

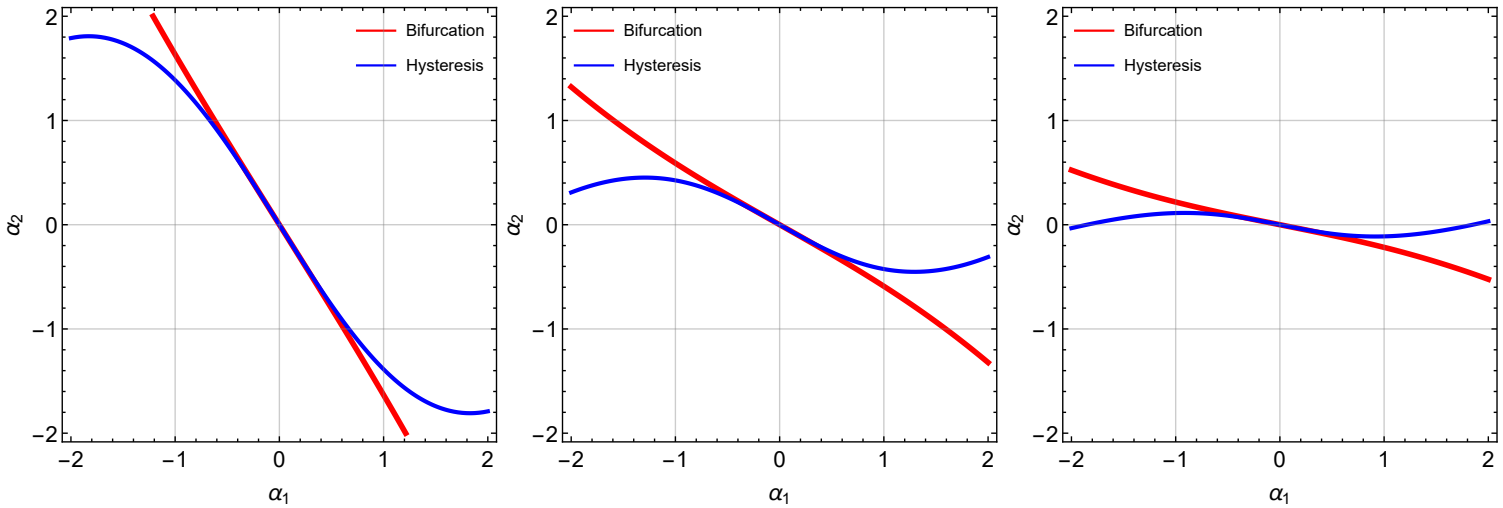

$l = \pi,$ $l = 2\pi,$ $l = 4\pi$

Approximations of B and H $(a_0 = 2, a_{i\geq 1} = 0)$

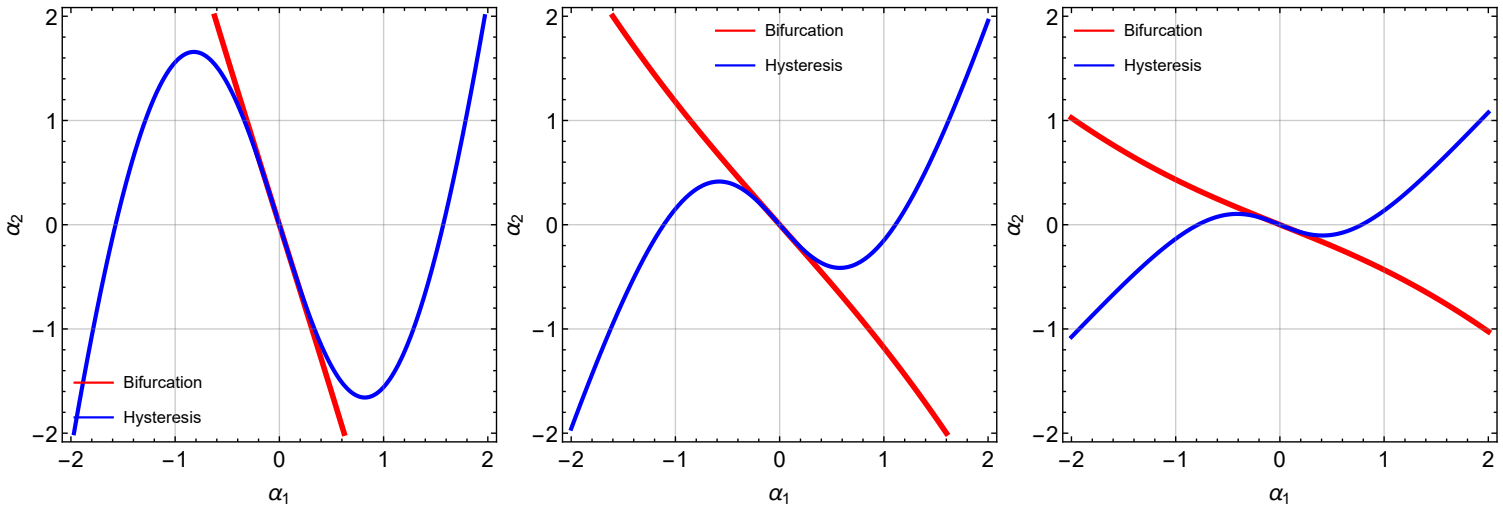

$l = \pi,$ $l = 2\pi,$ $l = 4\pi$

Approximations of B and H $(a_0 = 1/2, a_{i\geq 1} = 0)$

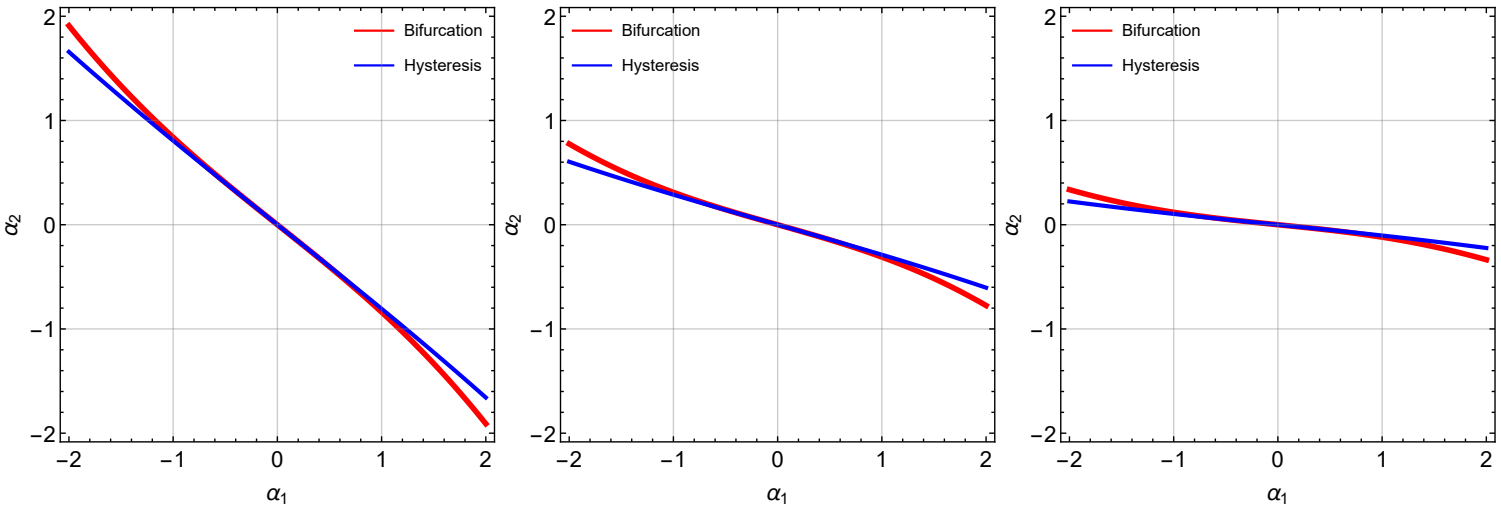

$l = \pi,$ $l = 2\pi,$ $l = 4\pi$

Approximations of B and H $(a_0 = 1/2, 1, 2, a_{i\geq 1} = 0)$

$a_0 = \frac{1}{2}$

$a_0 = 1$

$a_0 = 2$

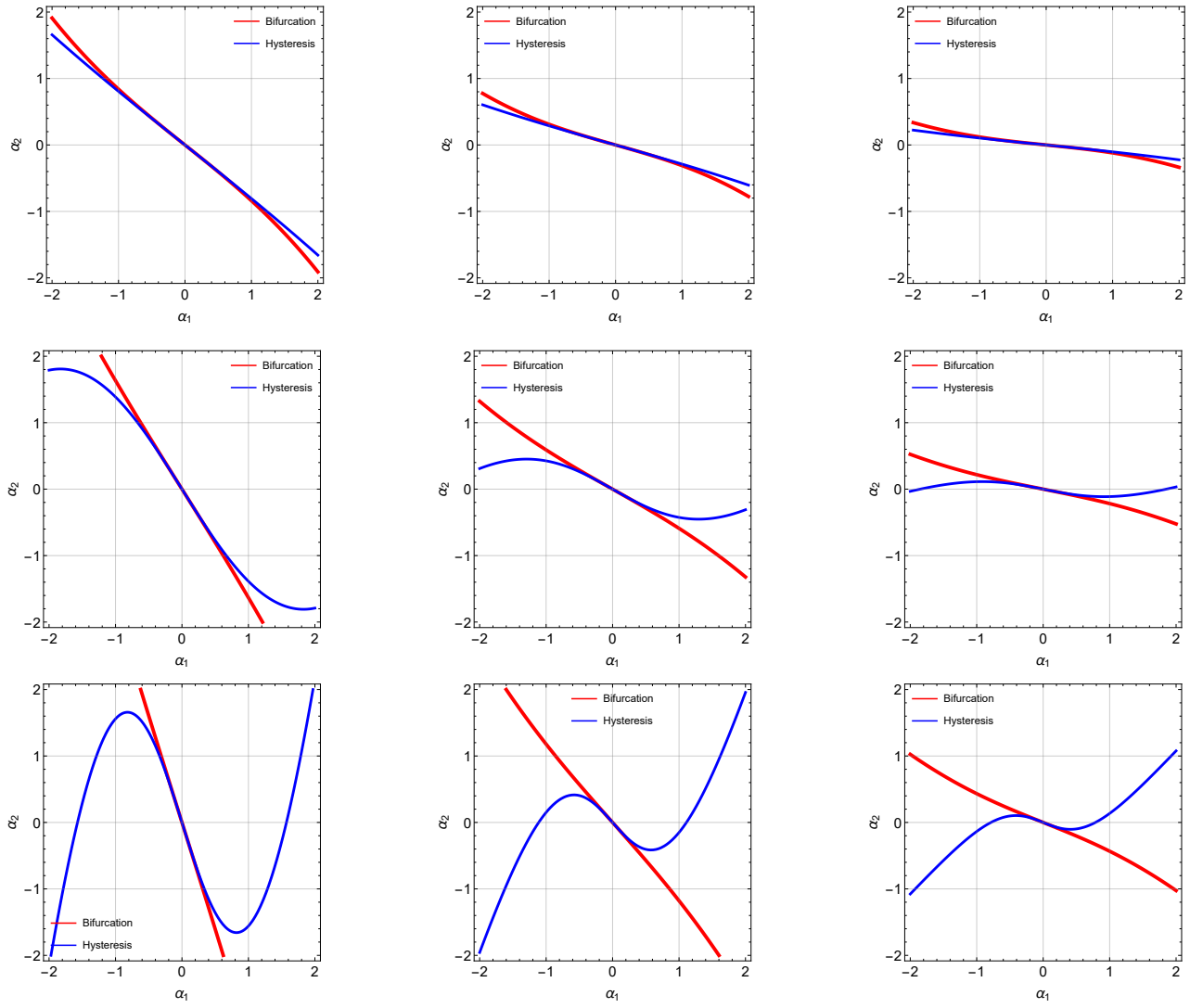

$l = \pi,$ $l = 2\pi,$ $l = 4\pi$

Conclusion

We would like to see perturbation (imperfection) of bifurcation of solutions of PDE, variational problem, ...
These are just to investigate singularities of zero sets of certain maps of some Hilbert space with parameters.
Our motivation is just to watch how bifurcation set B and hysteresis set H, etc. are.
We revisit Euler buckling problem, and treat very simple bifurcation: pitchfolk bifurcation.
We manage to compute the equations defining B and H up to order 3, but it is complicated enough.
What is next?
We continue much complicated examples? or equations with physical background?
Need to find handy examples. Any suggestions are welcome.

Thank you very much
for your attention!